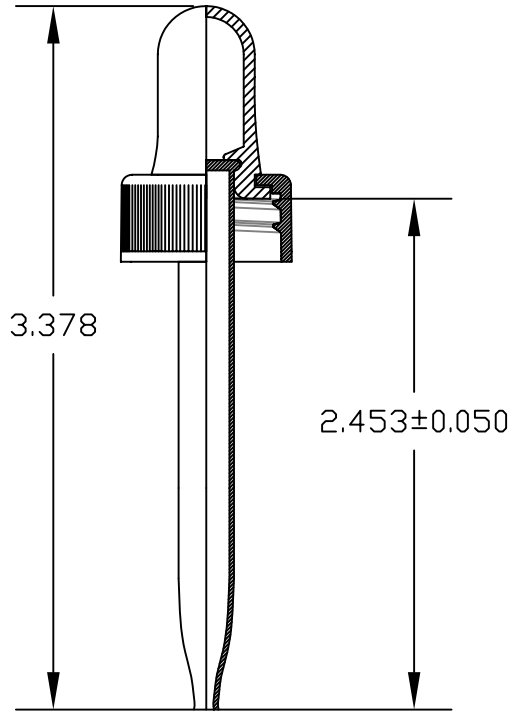

NOTES
All Dimensions are Nominal

DATE	SYM	REVISION RECORD	TOLERANCES (Except as Noted)	Paramark Corporation		
			DECIMAL 2 PL ±.01 3 PL ±.005 4 PL ±.0005	MAT'L N/A	SCALE N/A	DRAWN BY: JGF
			ANGULAR ±0° 30'	TITLE 18-400 Assy .5 OZ		
			FINISH √ 64	DATE 04.09.02	DRAWING NUMBER PM-01040902	